DP304 SIXTIES J BRIDGE

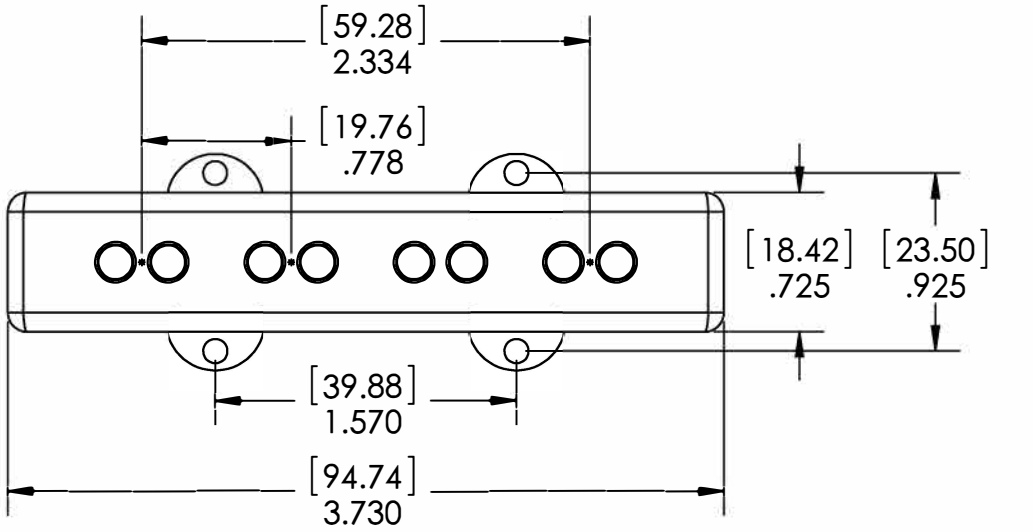

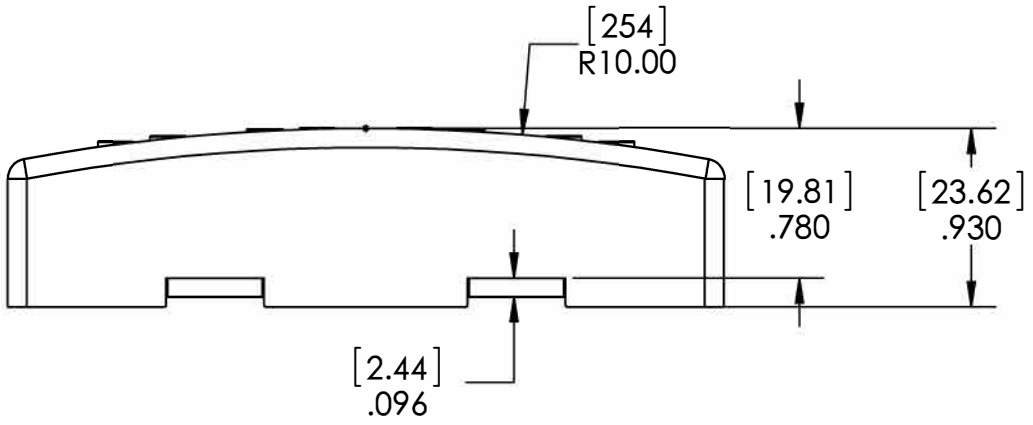

DiMarzio www.dimarzio.com

1388 Richmond Terrace, PO Box 100387, Staten Island, NY 10310
Tel. (718)981-9286, Fax (718)720-5296, Email: tech@dimarzio.com

TITLE: Sixties J dimensions

Details:

PROPRIETARY AND CONFIDENTIAL
THE INFORMATION CONTAINED IN THIS DRAWING IS THE SOLE PROPERTY OF DIMARZIO, INC. ANY REPRODUCTION IN PART OR AS A WHOLE WITHOUT THE WRITTEN PERMISSION OF DIMARZIO, INC. IS PROHIBITED.

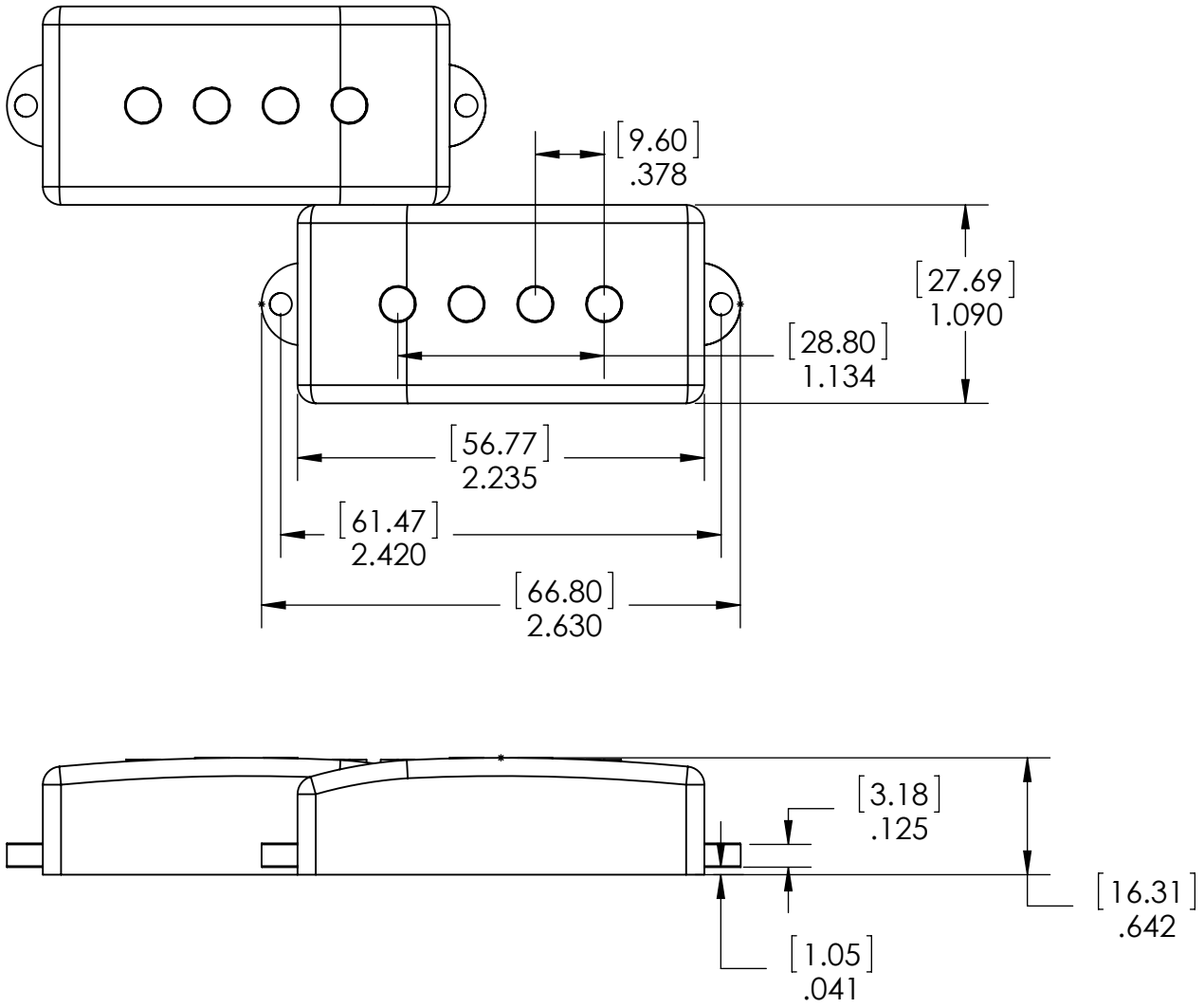

DiMarzio® www.dimarzio.com

TITLE: Sixties P dimensions

Details:

1388 Richmond Terrace, PO Box 100387, Staten Island, NY 10310
Tel. (718)981-9286, Fax (718)720-5296, Email: tech@dimarzio.com

PROPRIETARY AND CONFIDENTIAL
THE INFORMATION CONTAINED IN THIS DRAWING IS THE SOLE PROPERTY OF DIMARZIO, INC. ANY REPRODUCTION IN PART OR AS A WHOLE WITHOUT THE WRITTEN PERMISSION OF DIMARZIO, INC. IS PROHIBITED.