DOUGHTY

Product Data Sheet

# Slimline Hanging Clamp





| A slimline half coupler fitted with an Eye Nut. | |
|---|---|
| **Part Nos** | T58014 - Polished<br>T58015 - Powder Painted Satin Black |
| **Tube Diameter** | Ø48 - 51mm |
| **Materials** | Main Body - AW6082 T6 Aluminium<br>Roll Pins - Stainless Steel<br>Eyebolt Assy & Fixing - Grade 8.8<br>Eye Nut - C15E Steel |
| **Max Tightening Torque** | 30Nm |
| **Fixings** | M12 Eye Nut |
| **WLL** | 340Kg Vertical Load |
| **Weight** | 0.61Kg |
| **Factor of Safety** | 5:1 |
| **Approval** | TÜV Approved |

**WARNING**

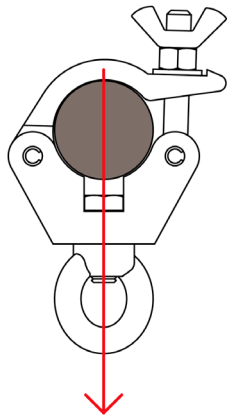

LOAD DIRECTION MUST BE IN LINE WITH THE BOLT SECURING THE EYE NUT IN PLACE
FOR ANY OTHER LOAD DIRECTIONS
SEE OUR T42307 PINK EYE NUT

Dimensions in mm

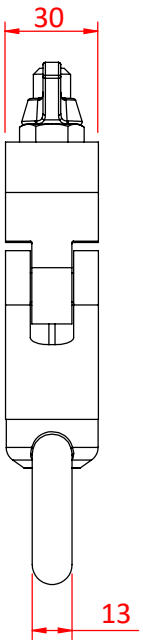


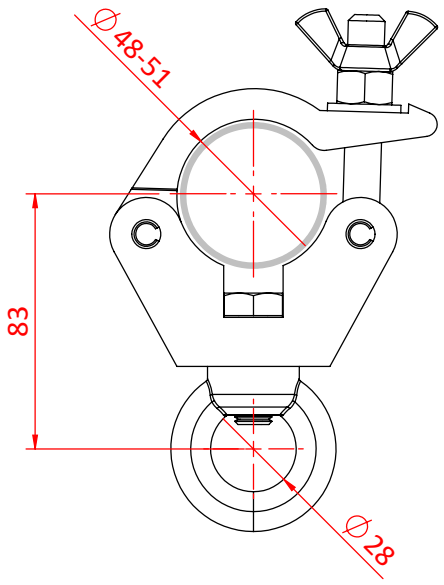


Doughty Engineering Ltd - Crow Arch Lane, Ringwood, Hampshire, BH24 1NZ, UK
+44 (0) 1425 478961, sales@doughty-engineering.co.uk - www.doughty-engineering.co.uk