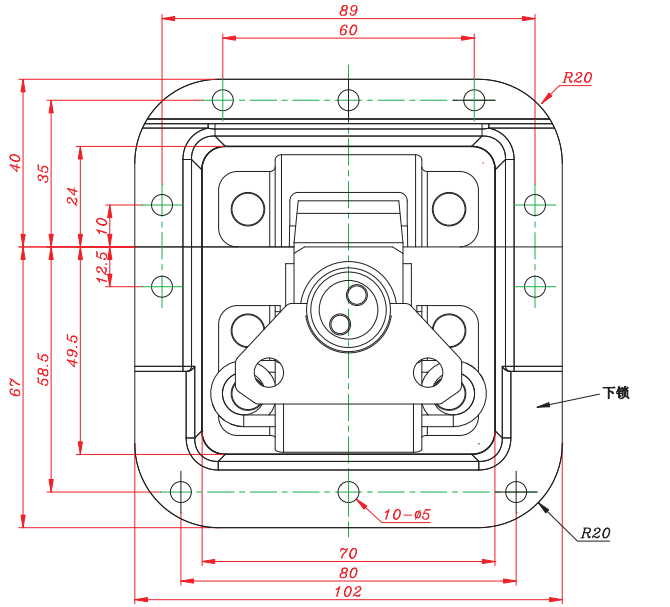

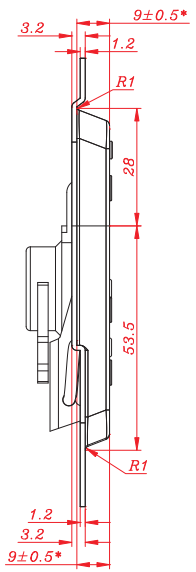

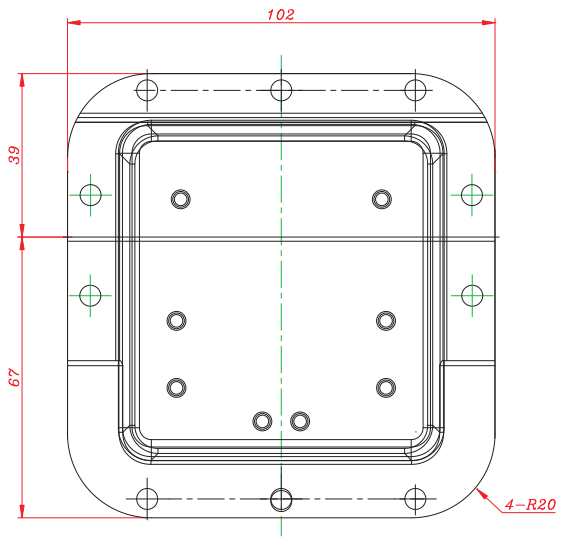

<3	±0.1
>3~10	±0.15
>10~20	±0.2
>20~40	±0.25
>40~100	±0.3
>100~200	±0.4
>200	±0.5

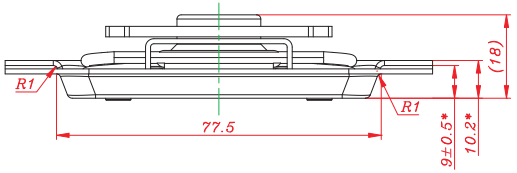

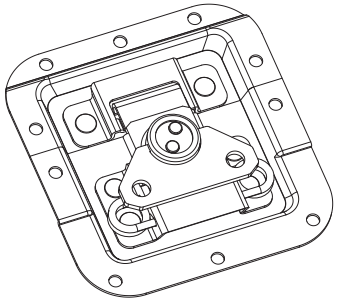

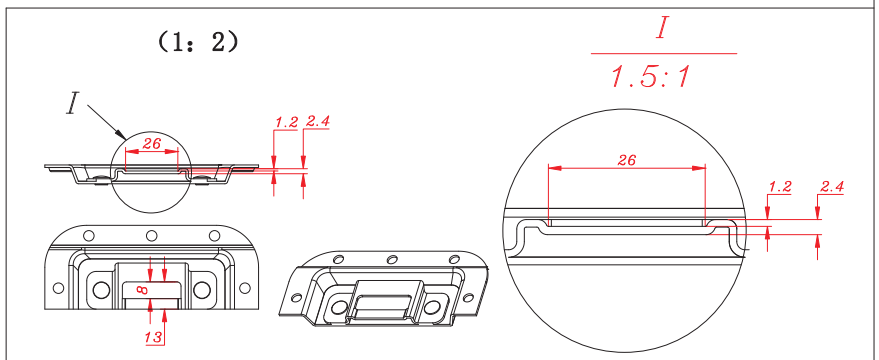

2				D5120			
1							SP071S0
			1:1.5				
			mm		A3		
			1/1				